MULTIBRACKETS

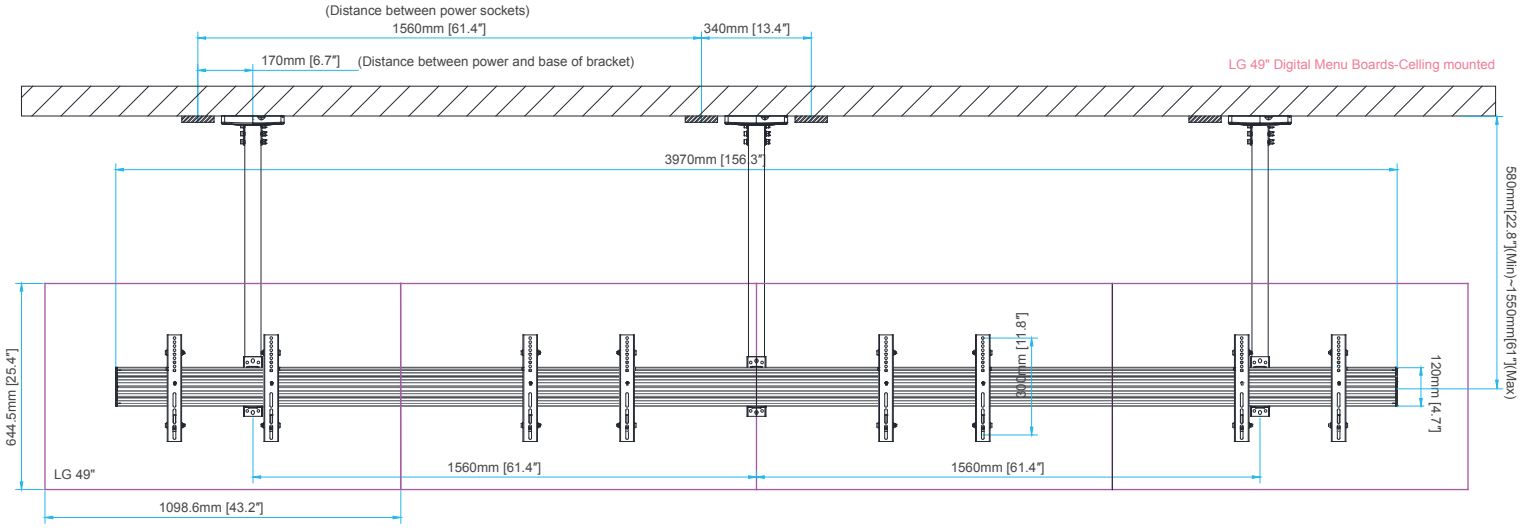

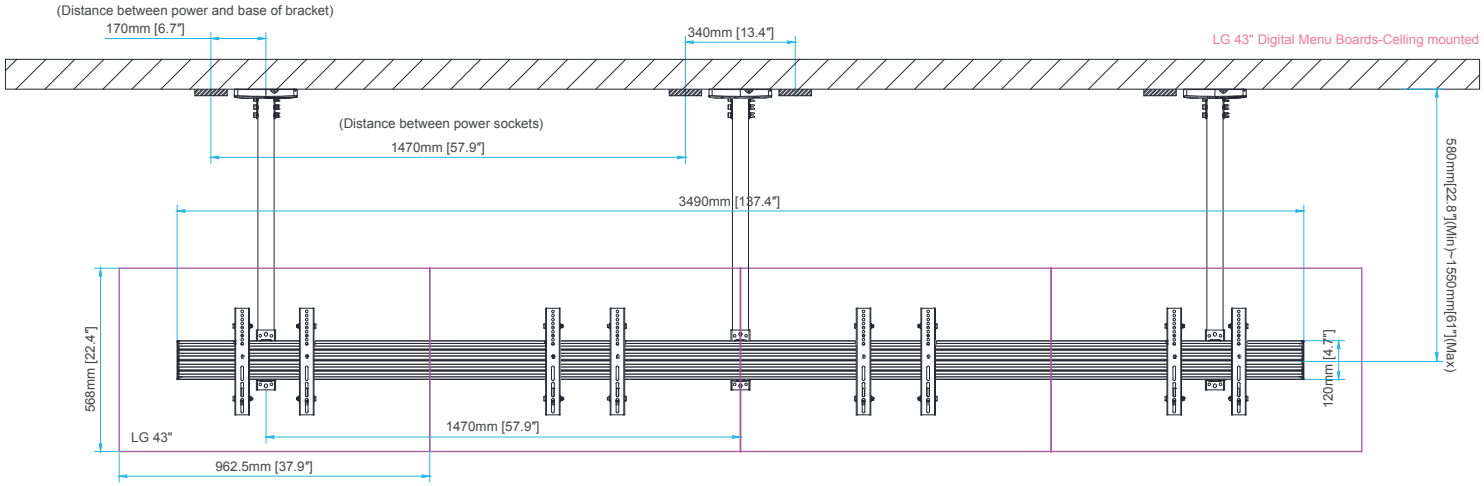

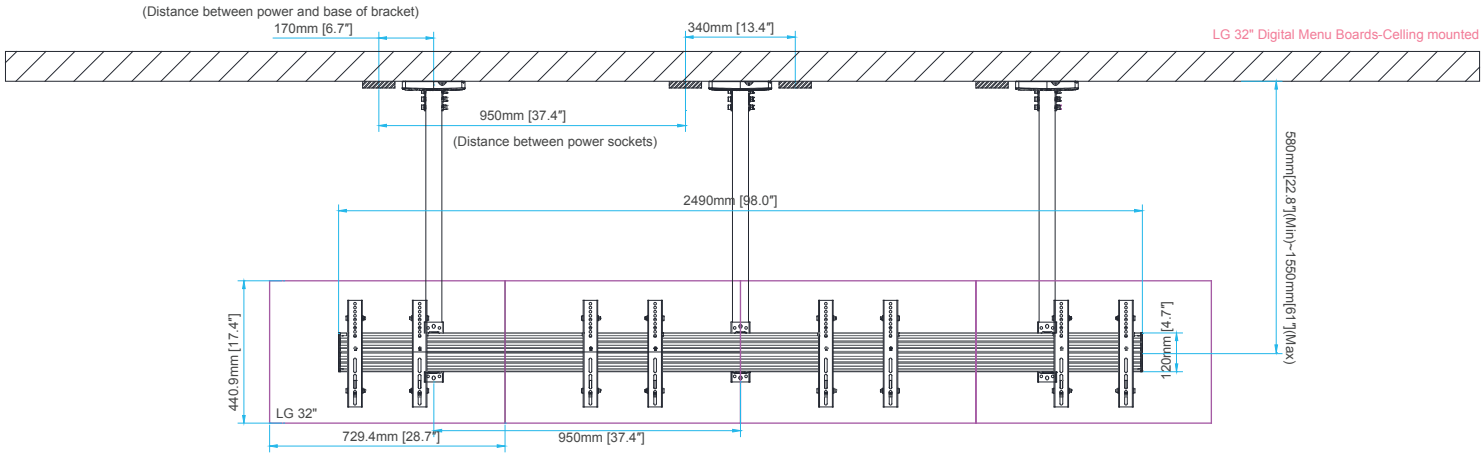

Multibrackets Europe AB
Döbelnsgatan 21, 11th floor SE-111 40 Stockholm, Sweden. +46(0)8-615 04 00 - support@multibrackets.com